CE

RoHS

K36PA

DINGS' MOTION yyyy/mm/dd

CUSTOMER APPROVE

Rev	Zone	Description	By	Date
0		Initial release		
1				
2				

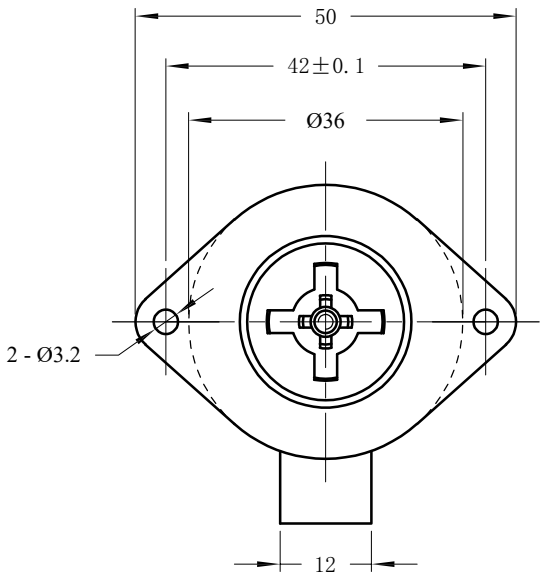

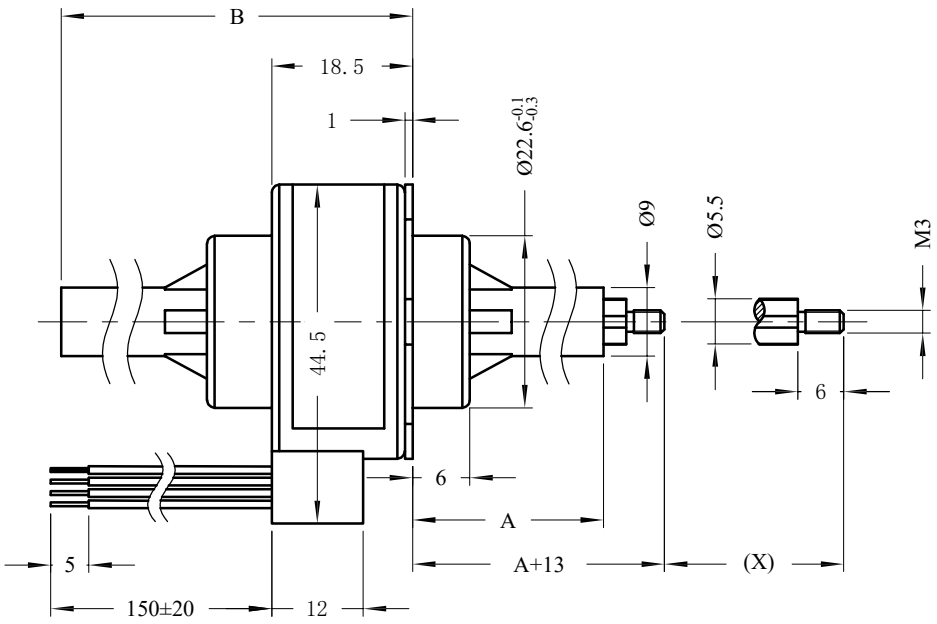

POWER CONSUMPTION功耗	W	5.6
WINDING VOLTAGE绕组电压	V	5/12
PHASE CURRENT相电流	mA	560/230
PHASE RESISTANCE相电阻	Ohm / 20℃	9/52(±10%)
PHASE INDUCTANCE相电感	mH / 1kHz	11.5/72/8/56(±20%)
STEP ANGLE步距角	°	7.5/15
SCREW LEAD导程	mm	0.6096/1.2192/2.4384
TRAVEL/STEP步长	mm	0.0127/0.0254/0.0508/0.1016
LINEAR FORCE推力	N / 300PPS	TBD
STROKE行程	mm	16/25/30/34/38
INSULATION RESISTANCE绝缘电阻	MΩ(DC 500V)	20
INSULATION CLASS绝缘等级		B
OPERATING TEMP RANGE工作温度范围	℃	-20~+55℃
STORAGE TEMP RANGE储存温度范围	℃	-40~+100℃
WEIGHT重量	g	120

行程	16	20	25	34	38
A	12	16	21	30	34
B	31.5	35.5	40.5	49.5	53.5

WIRING DIAGRAM接线图

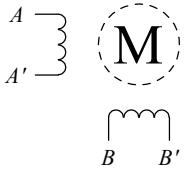

EXCITING SEQUENCE励磁顺序

UL3265

26AWG

RETRACT缩回	←				
RED红	A	+	-	-	+
BLACK黑	A'	-	+	+	-
BLUE蓝	B	-	-	+	+
GREEN绿	B'	+	+	-	-
EXTEND伸出	→				

Important note: 1. The motor must be handled gently, do not carry the lead by hand.
2. The motor shaft or screw can not withstand radial force, screw can not clamp or knock resulting in screw deformation.
3. The motor screw has been coated with special grease. If you need to add grease, please contact the manufacturer.
4. When the output shaft is required to fully extend or fully retract, it may be necessary to consider the use of special driving methods.

重要提示：1、电机必须轻拿轻放，严禁手拎导线。
2、电机出轴或丝杆不能承受径向作用力，丝杆不能夹持或敲击导致螺牙变形。
3、电机丝杆上已涂覆专用油脂，如需添加油脂请联系生产厂家，严禁涂覆其他油脂。
4、固定轴电机当要求输出轴完全伸出或完全缩回时，可能需要考虑采用特殊的驱动方式。

UNLESS OTHERWISE SPECIFIED
ALL DIMENSIONS ARE IN MILLIMETERS AND
TOLERANCES ARE AS BELOW PER ISO2768-cK.

LINEAR		ANGLE	
0 ~ 3	±0.2	0 ~ 10	±1.5°
3 ~ 6	±0.5	10 ~ 50	±1°
6 ~ 30	±0.8	50 ~ 120	±30'
30 ~ 120	±1.5	120 ~ 400	±15'

DRAWN	WANG	DATE	日期
APPRVD		DATE	
MODEL	K36PA		

DINGS 鼎智

SIZE	A4	SHEET	1 OF 1
SCALE	1:1	REV	0