Rev	Zone	Description	By	Date
0		Initial release		
1				
2				

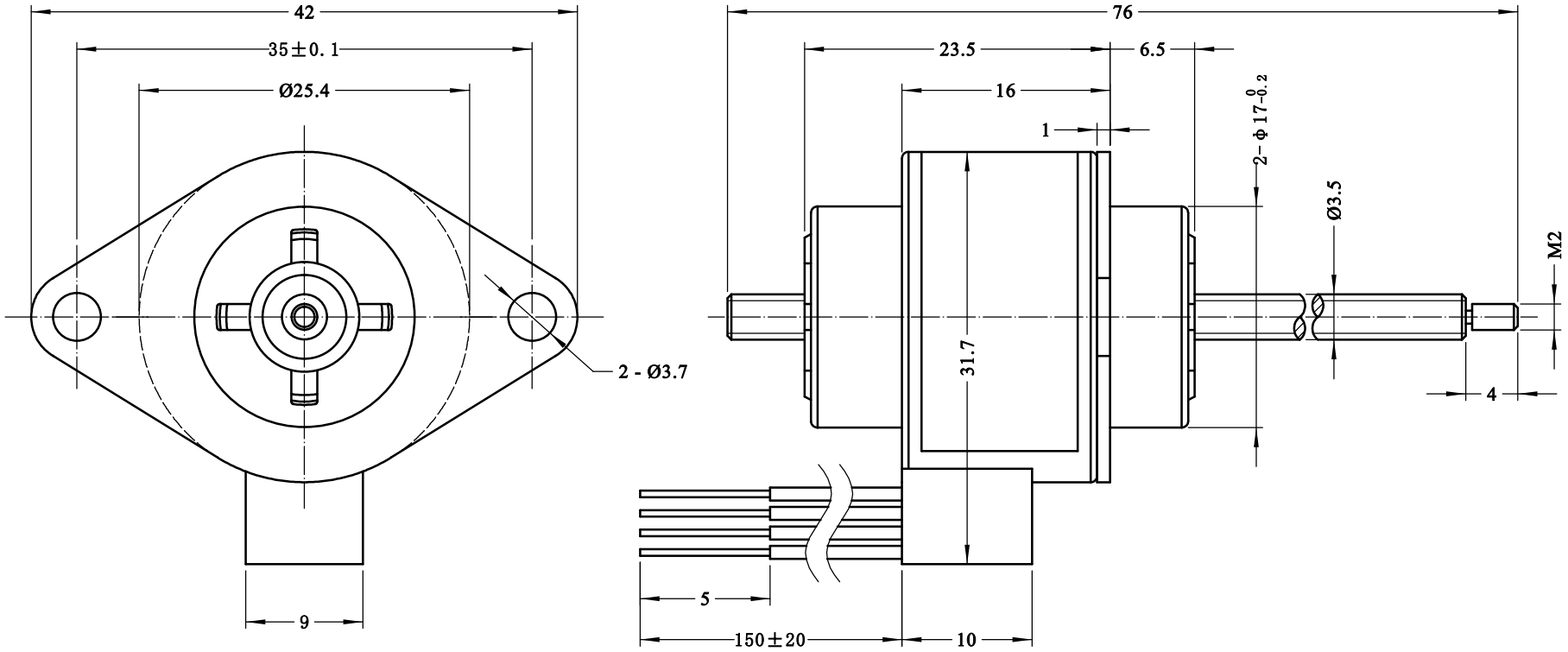

WIRING CHART

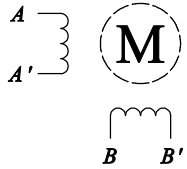

EXCITING SEQUENCE

UL1061 26AWG	RETRACT	←				
	RED	A	+	-	-	+
	BLACK	A'	-	+	+	-
	WHITE	B	-	-	+	+
	GREEN	B'	+	+	-	-
	EXTENT	→				

NOTICE TO PERSONS RECEIVING THIS DRAWING

THIS DRAWING IS ONLY CONDITIONALLY ISSUED, AND FOR THE SOLE PURPOSE OF INFORMING LICENSEES AND ASSOCIATE CONTRACTORS OF DINGS' MOTION, AND VENDORS THERETO AND CUSTOMERS THEREOF, RECEIPT OR POCESSION THEREOF DOES NOT CONFER TO TRANSFER ANY RIGHT IN THE SUBJECT MATTER OF THE DRAWING. THE DESIGN, CONSTRUCTION, TECHNICAL INFORMATION AND ALL OTHER SUBJECT MATTER SHOWN IN THIS DRAWING ARE AND REMAIN, EXCEPT AS MAY BE OTHERWISE INDICATED BY WRITTEN NOTICE HEREON, THE EXCLUSIVE PROPERTY OF SAID CORPORATION. THIS DRAWING MAY BE REPRODUCED ONLY BY LICENSEES AND ASSOCIATE CONTRACTORS OF SAID CORPORATION AND ONLY FOR LICENSED MANUFACTURE, AND BY VENDORS MANUFACTURING FOR SAID CORPORATION AND ONLY FOR LICENSEES AND ASSOCIATE CONTRACTORS.

RoHS CE

UNLESS OTHERWISE SPECIFIED
ALL DIMENSIONS ARE IN MILLIMETERS AND TOLERANCES ARE AS BELOW PER ISO2768-cK.

LINEAR		ANGLUR	
0 ~ 3	±0.2	0 ~ 10	±1.5°
3 ~ 6	±0.5	10 ~ 50	±1°
6 ~ 30	±0.8	50 ~ 120	±30'
30 ~ 120	±1.5	120 ~ 400	±15'

DRAWN	HU	DATE	
APPRVD		DATE	
MODEL	N25PA		

E:\1188\产品推广\PM推广\PM图纸\PM\PM25\静记基电.jpg

SIZE	A4	SHEET	1 OF 1
SCALE	2:1	REV	0