REV	DATE	DESCRIPTION	BY

16ZWC32L-1

DINGS' MOTION DATE CODE

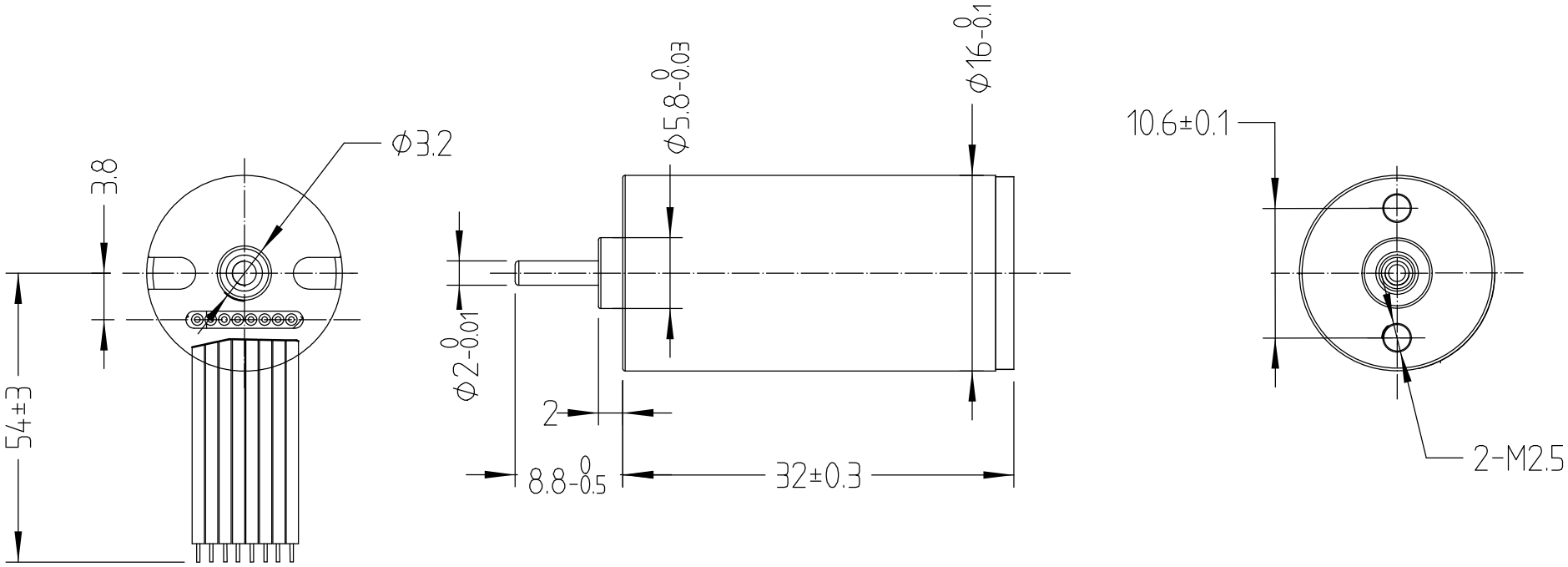

REDUCTION RATIO	-	1	DIELECTRICAL STRENGTH	500V 1KHz 1s 1mA
POLE PAIRS	-	2	INSULATION RESISTANCE	100MOhm 20C
RATED CURRENT	A	0.65	MOUNTING TYPE	IM B5 V1 V3
RATED SPEED	RPM	12600	DUTY TYPE	S1
RATED TORQUE	N-m	0.007	COOLING TYPE	IC410
RATED POWER	W	9.2	PROTECTION GRADE	IP40
RATED VOLTAGE	VDC	24	INSULATION CLASS	B 130C

CUSTOMER

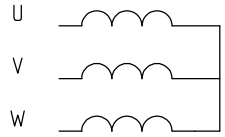

UL 3265 AWG 26	PHASE U	GRY	UL 3265 AWG 26	+5 VDC	RED
				HALL U	YEL
	PHASE V	WHT		HALL V	GRN
				HALL W	BLU
	PHASE W	BRW		GND	BLK

THIS DRAWING IS ONLY CONDITIONALLY ISSUED, AND FOR THE SOLE PURPOSE OF INFORMING LICENSEES AND ASSOCIATE CONTRACTORS OF DINGS' MOTION, AND VENDORS THERETO AND CUSTOMERS THEREOF, RECEIPT OR POCESSION THEREOF DOES NOT CONFER TO TRANSFER ANY RIGHT IN THE SUBJECT MATTER OF THE DRAWING. THE DESIGN, CONSTRUCTION, TECHNICAL INFORMATION AND ALL OTHER SUBJECT MATTER IN THIS DRAWING ARE AND REMAIN, EXCEPT AS MAY BE OTHERWISE INDICATED BY WRITTEN NOTICE HEREON, THE EXCLUSIVE PROPERTY OF SAID CORPORATION. THIS DRAWING MAY BE REPRODUCED ONLY BY LICENSEES AND ASSOCIATE CONTRACTORS OF SAID CORPORATION AND ONLY FOR LICENSED MANUFACTURE, AND BY VENDORS MANUFACTURING FOR SAID CORPORATION AND ONLY FOR LICENSEES AND ASSOCIATE CONTRACTORS.

UNLESS OTHERWISE SPECIFIED
ALL DIMENSIONS ARE IN MILLIMETERS
AND TOLERANCES ARE AS BELOW

LINEAR		ANGULAR	
0 - 3	±0.2	0 - 10	±1.5°
3 - 6	±0.5	10 - 50	±1°
6 - 30	±1	50 - 120	±0.5°
30 - 120	±2	120 - 400	±0.25°

DRWN	XU	DATE	20211102
APRV		DATE	

DINGS' 鼎智

16ZWC32L-1

SIZE	A4
SCALE	1:1