REV	DATE	DESCRIPTION	BY
00	20220719	INITIAL RELEASE	XU
01	20220723	ADD A TYPE KEY	XU
02	20220725	CHANGE ENCODER TO 1000 CPR	XU
03	20221010	ADD GROUND WIRE	XU

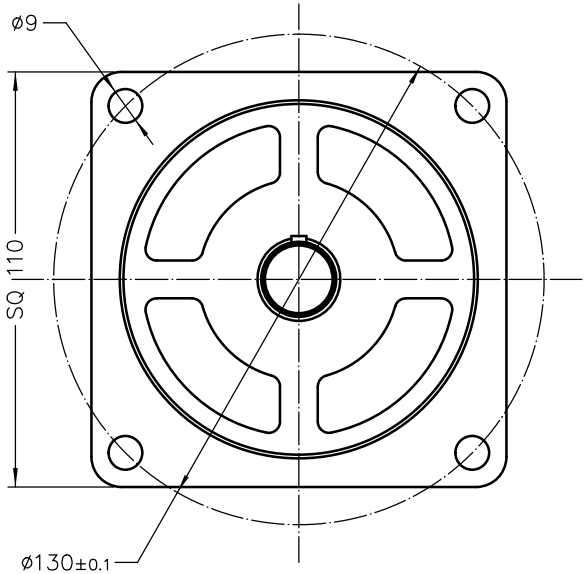

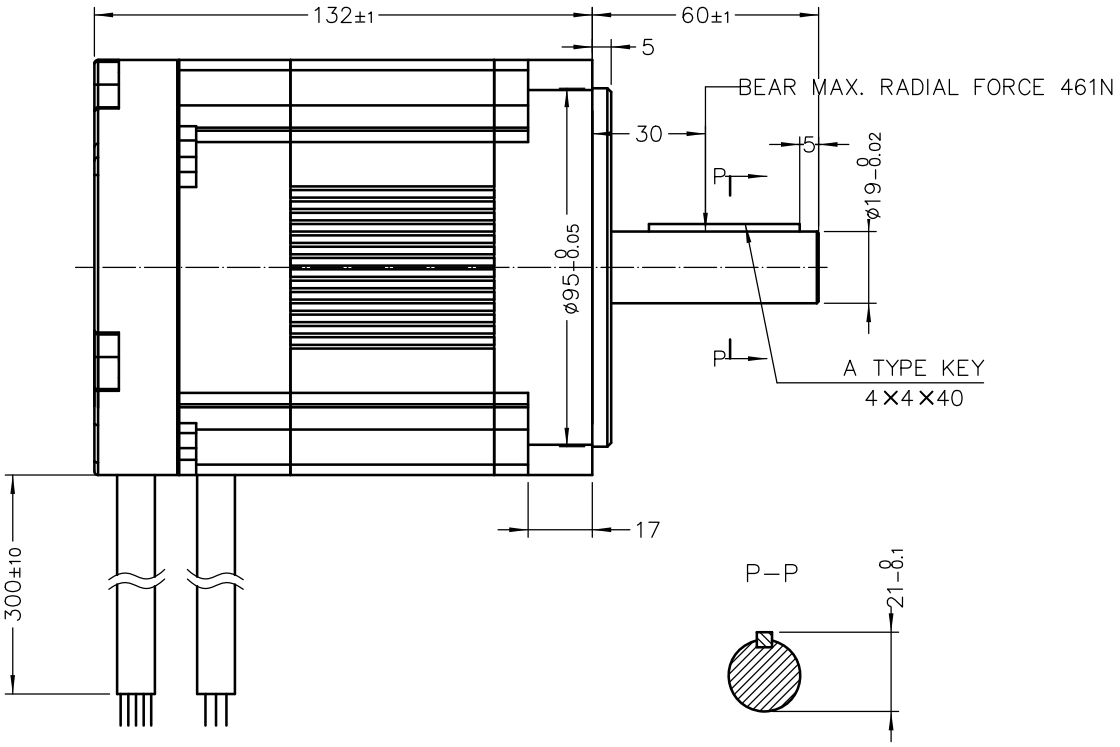

02

SRMI46-1000PC-PHL-C-5V		
PIN	ENCODER 1000 CPR	
	COLOR	DEFINE
1	RED	+5 VDC
2	BLK	GND
3	BLU	CH A+
4	GRN	CH B+
5	BRN	U
6	GRY	V
7	WHT	W
8	SHIELD	

RESISTANCE	Ω	TBD	INDUCTANCE	mH	TBD
TORQUE CONSTANT	Nm/A	TBD	DIELECTRICAL STRENGTH	1KV 1KHz 1s 1mA	
POLE PAIRS	–	5	INSULATION RESISTANCE	100MOhm 20C	
RATED CURRENT	A	10	MOUNTING TYPE	IM B5 V1 V3	
RATED SPEED	RPM	1500	DUTY TYPE	S1	
RATED TORQUE	N–m	4.6	COOLING TYPE	IC410	
RATED POWER	W	722.5	PROTECTION GRADE	IP40	
RATED VOLTAGE	VAC	120	INSULATION CLASS	B 130C	

CUSTOMER	GBA Global			
U V W	K/VVO 1.0×3C	PHASE U	YEL	
		PHASE V	RED	
		PHASE W	BLK	
		GND	WHT	03

THIS DRAWING IS ONLY CONDITIONALLY ISSUED, AND FOR THE SOLE PURPOSE OF INFORMING LICENSEES AND ASSOCIATE CONTRACTORS OF DINGS' MOTION, AND VENDORS THERETO AND CUSTOMERS THEREOF, RECEIPT OR POCESSION THEREOF DOES NOT CONFER TO TRANSFER ANY RIGHT IN THE SUBJECT MATTER OF THE DRAWING. THE DESIGN, CONSTRUCTION, TECHNICAL INFORMATION AND ALL OTHER SUBJECT MATTER IN THIS DRAWING ARE AND REMAIN, EXCEPT AS MAY BE OTHERWISE INDICATED BY WRITTEN NOTICE HEREON, THE EXCLUSIVE PROPERTY OF SAID CORPORATION. THIS DRAWING MAY BE REPRODUCED ONLY BY LICENSEES AND ASSOCIATE CONTRACTORS OF SAID CORPORATION AND ONLY FOR LICENSED MANUFACTURE, AND BY VENDORS MANUFACTURING FOR SAID CORPORATION AND ONLY FOR LICENSEES AND ASSOCIATE CONTRACTORS.

UNLESS OTHERWISE SPECIFIED
ALL DIMENSIONS ARE IN MILLIMETERS
AND TOLERANCES ARE AS BELOW

LINEAR		ANGULAR	
0 – 3	±0.2	0 – 10	±1.5°
3 – 6	±0.5	10 – 50	±1°
6 – 30	±1	50 – 120	±0.5°
30 – 120	±2	120 – 400	±0.25°

DRWN	XU	DATE	20220719
APRV		DATE	

DINGS' 鼎智

110ZWS132XE–1

SIZE	A4
SCALE	1:2