| REVISION | | | |
|---|---|---|---|
| REV. | DATE | DESCRIPTION | DRAWN BY |

CE
RoHS
17E2225BS2.54-100
DINGS' MOTION
Work order
DATE REV00

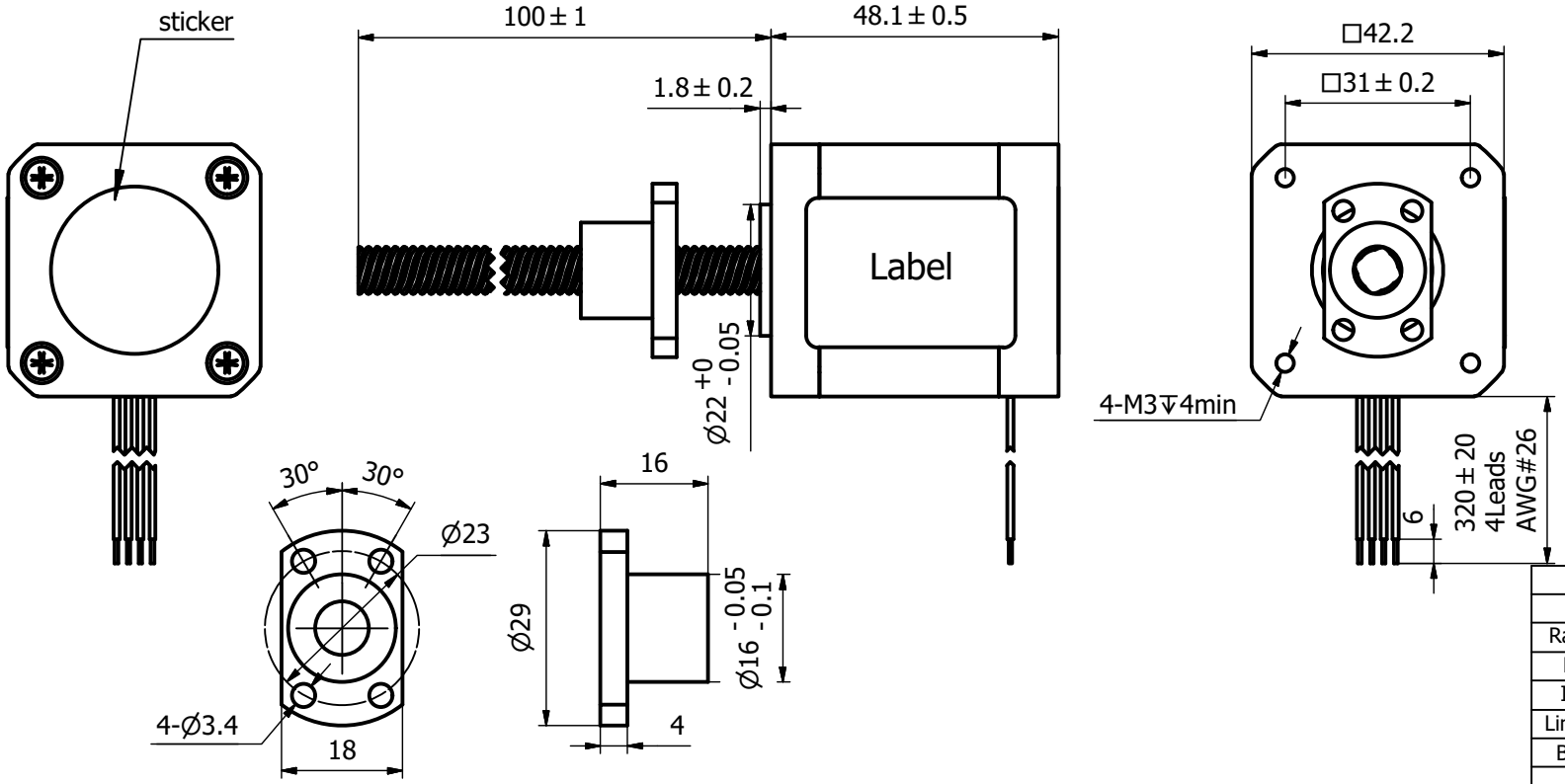


| | |
|---|---|
| Motor's phase | 2 |
| Step angle | 1.8° |
| Rated current/phase | 2.5 A |
| Resistance/phase | 1.0Ω±10% |
| Inductance/phase | 1.8mH±20% |
| Linear travel per step | 0.0125mm/step |
| Ball screw diameter | Φ8.0mm |
| Ball screw lead | 2.5mm |
| Grade | C7(KSS) |
| Insulation class | B |
| Insulation resistance | 100MΩ(500VDC) |
| Heat rise | 80°C |
| Motor weight | 0.386 kg |

Notes,
1.To maximize output force and life of linear actuators,
radial load on lead screws should be avoided or be kept at a minimum.

CUSTOMER

WIRING CHART

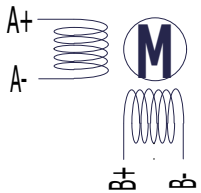


EXCITATION SEQUENCE

| CW | | | | |
|---|---|---|---|---|
| Red A+ | + | | - | |
| Red/wht A- | - | | + | |
| Green B+ | | + | | - |
| Grn/wht B- | | - | | + |
| CCW | | | | |

NOTICE TO PERSONS RECEIVING THIS DRAWING
THIS DRAWING IS ONLY CONDITIONALLY ISSUED, AND FOR THE SOLE PURPOSE OF INFORMING LICENSEES AND ASSOCIATE CONTRACTORS OF DINGS' MOTION, AND VENDORS THERETO AND CUSTOMERS THEREOF, RECEIPT OR POCESSION THEREOF DOES NOT CONFER TO TRANSFER ANY RIGHT IN THE SUBJECT MATTER OF THE DRAWING. THE DESIGN, CONSTRUCTION, TECHNICAL INFORMATION AND ALL OTHER SUBJECT MATTER SHOWN IN THIS DRAWING ARE AND REMAIN, EXCEPT AS MAY BE OTHERWISE INDICATED BY WRITTEN NOTICE HEREON, THE EXCLUSIVE PROPERTY OF SAID CORPORATION. THIS DRAWING MAY BE REPRODUCED ONLY BY LICENSEES AND ASSOCIATE CONTRACTORS OF SAID CORPORATION AND ONLY FOR LICENSED MANUFACTURE, AND BY VENDORS MANUFACTURING FOR SAID CORPORATION AND ONLY FOR LICENSEES AND ASSOCIATECONTRACTORS.

UNLESS OTHERWISE SPECIFIED ALL DIMENSIONS ARE IN MILLIMETERS AND TOLERANCES ARE AS BELOW PER ISO2768-cK.

| LINEAR | | ANGULAR | |
|---|---|---|---|
| 0～3 | ±0.2 | 0～10 | ±1.5° |
| 3～6 | ±0.5 | 10～50 | ±1° |
| 6～30 | ±0.8 | 50～120 | ±30′ |
| 30～120 | ±1.5 | 120～400 | ±15′ |

| | | | |
|---|---|---|---|
| DRAWN | QIN | DATE | 2022/12/28 |
| APPRVD | | DATE | |
| MODEL | 17E2225BS2.54-100 | | |

DINGS

| | | | |
|---|---|---|---|
| SIZE | A3 | SHEET | 1 OF 1 |
| SCALE | 1：1 | REV | 00 |